Shocks: The Last Technical Frontier

An over-view of shock absorbers and how little is really known about them.

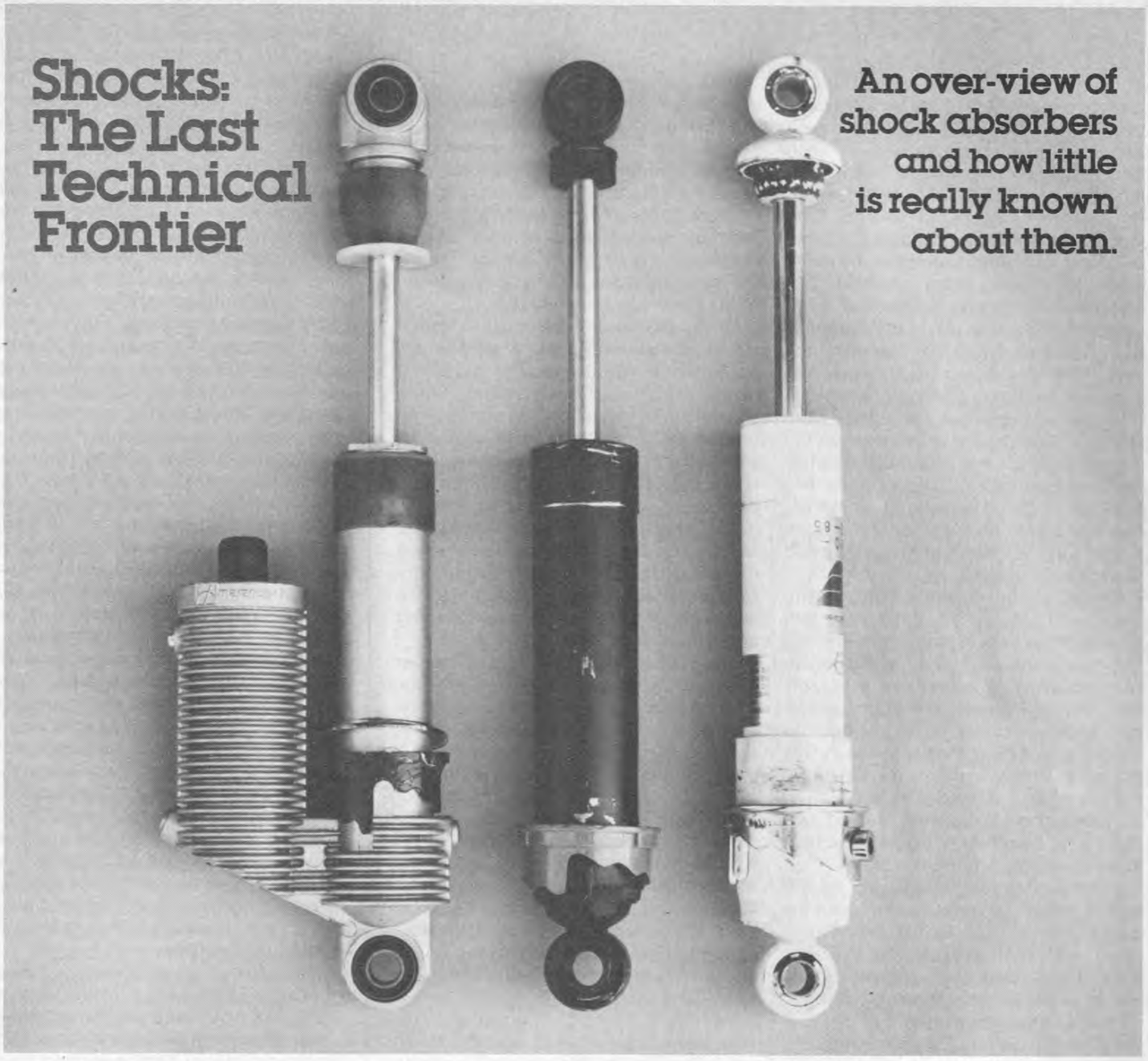

By Dave Holeman

• EVERYONE HAS QUESTIONS about dirt bikes' rear suspensions but no-one has The Answer. There is no agreement even among experts as to which approach is the best. Rear shock absorber units and systems for dirt bikes develop problems that have stumped aerospace engineers, multi-million dollar factories, Grand Prix race champions, you and us. And when nobody has "the answer" the search for it is the most intense; that's just what people in the shock business are doing today.

There are more than twenty shock makers in the market, and numerous types of each brand. But there is no clearly superior production shock on the market. We have never heard of any professional expert who uses non-modified, over-the-counter production shocks. Each rider requires special spring and damping rates to match his riding style (and size), motorcycle weight, course demands and weather conditions. This is the case with the top motocrossers, cross country racers, ISDT riders and enduro kingpins.

The shocks that work best for Roger DeCoster will not match the requirements of Marty Smith or Dick Burleson or Carl Cranke or Larry Roeseler or Mitch Mayes. Similarly, the rear suspension that your friend raves about on his bike won't likely be right for you—even if both of you are the same size, have equal ability and are riding identical bikes. The shock manufacturers know that variations in shock absorber damper and spring requirements are virtually limitless. There is, therefore, no practical answer to the problem of making one, or just a few, shocks to meet the requirements of four million dirt riders.

Shock suppliers deal with the motorcycle suspension dilemma in three general fashions. A small percentage of manufacturers hand-build shock dampers and match springs to suit individual riders. This is the best and most costly method. Many more companies spend considerable amounts of time and money in development of shocks which will perform well for the majority of riders and can be mass-produced. These companies are equally serious about making quality products *and* bottom-line profits, so their shocks are generally middle-of-the road in pricing. And, as in any market in which demand exceeds supply, some individuals or concerns seek a fast buck. Fancy packaging, shiny finishes and foundationless claims are usually attached to temptingly low prices.

Our three-shock test is not a comparison shootout between the trio. It is three individual product evaluations which, over the span of three months of testing, finally jelled. The test bike was a 400cc Penton and the shocks were mounted at a 45° lay-down angle. The three shocks are

available everywhere. They all use a gas/oil separation method where the damping fluid is sealed from atmosphere to eliminate aeration or foaming. Two of the shocks can be disassembled for servicing; one is permanently sealed. One shock features rider-adjustable gas pressure and has four alternative dampers valves and spring rates available. Gas pressure and valving cannot be rider-altered in the other two, but alternative spring rates are available. One manufacturer builds his shock in an alloy body with a cast-on auxiliary reservoir while the other two use conventional tubular steel cylinders. The Japanese shock uses the damper body for the piston sleeve while the American and European units two have slip-in piston sleeves. It would appear that these and the other shock manufacturers go to great lengths just to avoid similarities in design.

Manufacturing quality-control and damping fluids are the most important fabrication aspects of motorcycle shocks. The mechanical tolerances allowable are minute. With as many as a dozen hydraulic valving parts in the damper system, even very small tooling errors can multiply and make a shock useless. An old model-run shock will not always perform the same as a late-version because of manufacturing tooling wear. If used as a pair, you could end up with a mismatched set of dampers.

Hydraulic damping fluids are equally important. Little is really known about the damping fluids used by the shock manufacturers. We know of only two hydraulic fluids which have been specifically designed as motorcycle shock oil: Bel-Ray LT and a British-developed Castrol product available only in Europe. Hydraulics experts say the use of the lowest viscosity (thinnest) fluids are preferable to limit aeration. SAE 3- to 5-weight oils are most desirable. Thicker viscosity fluids (SAE 10- to 30-weight) will make vast and often undesirable changes in the damping action (compression and rebound) of a shock designed for thinner oil. Using a thicker oil will often require stronger springs to compensate for the increase in hydraulic restriction. A change in oil viscosity without a corresponding adjustment in spring tension will alter the speed at which the shock piston is able to move. This can cause pump-up (when the shock will not compress fully) or pump-down (when the shock will not rebound fully).

The upside-down mounting craze is, with few exceptions, not the smart way to fit shocks. It is true that sealed gas-pressurized shock dampers will function equally well in any position—right-side-up, upside-down or prone. But, the object of inverted mounting is to attach the lightest end of the shock to the swinging arm and thus reduce unsprung weight, and both ends of most shocks have about the same weight. Also, in shocks with a clearance volume bladder but otherwise conventional construction, leakage of gas out of the bladder into the fluid (which can happen) will cause a serious loss of damping if an inverted installation is used; the consequences of a leak are slight when the shock is right-side-up.

Fitting shocks properly is as important as factory assembly. More shocks are damaged or destroyed by careless mounting than assembly failure. When shocks are bolted to the frame and swing arm attachments you should check the side, top and bottom eye clearances. The shock eyes should slip between the support plates or bolt washers so that the rubber grommets cannot move freely side to side. This will lead to premature fatigue of the rubbers. If the grommets are considerably wider than the damper eyes the shock can wiggle side-to-side excessively and fatigue the rubber.

The rubber grommets in the damper eyes are themselves shock cushions. Without them compression and extension forces could shear the mounting bolts or damage the chassis. It is important that there be sufficient clearance in the top frame and bottom swing arm mounts for the damper eye to compress into the mounting channel the full distance of the rubber grommet's thickness. When the shock is fully compressed, the eye can become jammed like a pry-bar tip when the grommet is bottomed. The eye will get caught (with lay-down shocks) and, as the shock extends to a more vertical position, snap the damper shaft.

Lay-down shock configurations present new problems and compound old ones. The additional work load placed on lay-down shocks (versus those vertically mounted) demands more attention to the grommets and eyes. Many standard grommets receive more compression and shock forces than they were designed to accept, particularly if they are merely a carry-over from a conventional vertical or street bike design. When rubber grommets show the slightest form of fatigue it's time for replacement.

There also must be sufficient clearance for the spring, retaining cap and damper body to clear the frame and swing arm, as lay-down shocks pivot greatly from full-extension to full-compression. Some shocks cannot be mounted upside-down on certain bikes because the springs and retaining caps will bind on the swing arm or its supports when the suspension is compressed. If they bind, the retaining caps can break (releasing the spring), the mounting bolts can be sheared, holes elongated or the damper eye snapped off. Many experienced riders heliarc the eye

• *Nothing is new about the design concept of the Marzocchi large-body shocks. The Italian suspension firm has merely "beefed-up" their conventional small-body dampers without any change in fundamental design principles. To cope with the additional work loads placed on dampers and springs by lay-down shock systems Marzocchi increased the shaft, oil reservoir and spring wire sizes.*

The dual-reservoir design gives the Marzocchis the appearance of being heavy. They are actually light considering their size and complexity. Each complete shock weighs four-pounds, two-ounces, which is competitive with most other damper/spring assemblies. The body, shaft eye, preload cam, retaining screw-caps and sleeve retainer are aluminum. Only the chrome-plated shaft, piston, topping spring and sleeve are steel.

Marzocchi's low-pressure gas shock incorporates a patented, but uncomplicated, oil flow system. The compression (slight) and rebound (much heavier) damping orifices are separate. The piston damper valve assembly passes oil very freely on the compression stroke. On rebound the piston orifices are closed by a floating washer and the hydraulic damping fluid is then diverted to restricted holes in the piston valving, and past the rod to a chamber above the sleeve, where it drains into the outer shock body.

A conventional coil spring subdues topping jolts. The shaft seal is sandwiched between the body's screw cap and sleeve retainer. It is held in position by a soft spring. In its semi-isolated location it gets only a limited amount of internal pressure which will usually increase seal friction (drag) on the shaft.

To assure an oil circulation pattern, the foot valve in the sleeve rests on a cast-in base hole which runs into the auxiliary oil reservoir. When the body's screw cap is tightened a firm seal is formed by the pressure of the sleeve base plate over the hole. In this manner the Marzocchi draws all the damping oil entering the sleeve (on the rebound stroke) from the auxiliary reservoir rather than re-circulating fluid only within the main damper body.

The Marzocchi diaphragm-type pressurization system has two functions: to isolate the hydraulic fluid from air and to provide a compression chamber for the volume of the shaft during the compression stroke. It does not (measurably) raise the vaporization point of the oil. This shock is serviceable and can be disassembled easily. Optional damping valve systems are available but the main advantage of its disassembly feature is to permit replacement of the hydraulic fluid. The limited fluid capacity of shock dampers and their high-work load causes the oil to fatigue through shearing, and lose its viscosity very quickly.

The diaphragm bag is a neoprene cup

that fits in the auxiliary reservoir after the damper is filled with oil and pumped clean of air. A slotted screw in the auxiliary body permits air to escape from that chamber as the shock body is filled. The two phillips-head screws that seal the drilled oil passages need never be removed. The threaded cap over the diaphragm contains a conventional tire valve stem for charging. Operating air pressure is 28 psi.

The bulky design of the Marzocchi shock body will make it difficult to fit in an inverted position on some machines. We fitted our pair right-side-up. The Marzocchi is, when fitted, narrower than most damper/spring assemblies and will offer minimal interference with the chain. Our test units were the Number 4-series Marzocchis which have the strongest damping and highest spring (140 to 165 lbs-in.) rates. These are specifically aimed at the expert-level, big-bike riders. The Number 2 and 3 models have softer damping and spring ratings.

Bringing the Marzocchis up to normal operating temperatures requires hard riding over rough terrain. Otherwise the rigidity of the spring and damper will not allow sufficient shock movement to agitate and warm the damping fluid. At slow to moderate speeds the Number 4 units deliver a harsh ride.

The harder our Penton was ridden, the better the Marzocchis performed. They acted as if they preferred hard accelerating, fast riding through king-size whoop-de-doos. In a special eight mile-long whoop-laden section we use to find the limits of motorcycles' suspensions we were unable to make the Marzocchi dampers fade sufficiently to reduce comfort and stability. These dampers require continuous harsh usage to maintain normal operating temperature as they dissipate heat quickly.

At the conclusion of 80 miles of testing we disassembled the shocks for inspection and to replace the fluid. Disassembly and assembly are straightforward but require lint-free, hospital-clean conditions. The smallest piece of dirt or lint can foul the damping mechanisms. With Bel-Ray LT-100 (5 weight shock fluid) we noticed no difference in performance. The shock bodies never got really hot—just warm.

After another 80 to 100 miles we noticed that the spring preload had sagged markedly. The shocks acquired a slight pump-down problem as they hesitated to rebound quickly enough in continuous whoop-de-doos. Our Number 4 Marzocchis were far too harsh for trail and most enduro conditions. They would also be too stiff for any race bike smaller than 250cc. With a better-quality spring they would be the best over-the-counter shock assemblies available for experts—motocross, desert or enduro racers. As is, the damping units are the finest we have ever ridden.

Marzocchi

Low-Pressure Gas/Air Charged

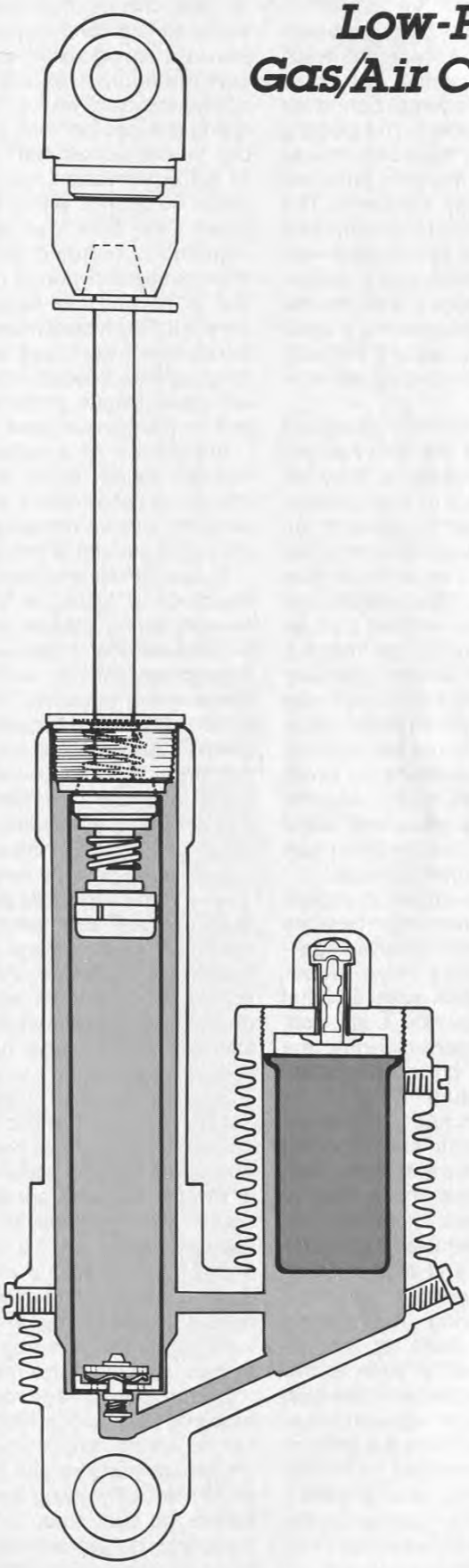

to the body and shaft for strength.

Large diameter shock/spring assemblies can pose problems with the chain hitting the damper or spring. The brake rod or cable can become bound or pulled by shock movement. The pivoting or swinging action of lay-down shocks requires lubrication of the eyes, bolts and any spacers that may be used. The shocks must be removed regularly, and the eyes cleaned and re-greased—especially in wet environments. Some shocks that use the shock body for the piston sleeve (rather than having a separate internal sleeve) can seize if the body is dented by a blow from a flying stone or even chain whip.

Rubber stoppers or bottoming bumpers for motorcycle shocks are, with rare exceptions, single-purpose items. They are commonly made of hard, high-density rubber, and are used to prevent the damper body from smashing against the eye mount on the shaft when the shocks are fully compressed. Most shocks are designed so that if the rubber bumper were removed, internal bottoming damage cannot occur. Others (externally adjustable types in particular) have a slim safety margin and the compression thickness of the bumper cannot be reduced. Experienced riders sometimes cut down the bumper's thickness to increase the amount of unrestricted shock and wheel travel. This is a risky business and can lead to early-on permanent damage.

Conventional hard-rubber bumpers have a production advantage—they are cheap—and a functional disadvantage—harsh damping reaction. Hard rubber bumpers absorb shock with minimal cushioning when hit quickly. Long, soft, porous-urethane bumpers eliminate the bottoming harshness, but cost substantially more to manufacture.

Springs must be matched to numerous variables—compression and rebound damping, wheel/shock travel and speed, chassis geometry, rider and bike weights and mechanical/physical tolerances. Additionally, they must be able to compensate for terrain, speed, and engine power.

Most shock dampers are designed around a specific spring. The spring's cam adjuster usually allows for ½ to ¾-inch preload adjustment in three to five equal increments. The change in pre-load does not measurably alter rebound force. The adjuster merely controls the amount of force (or weight) required to initially compress the shock. You cannot make a shock spring "stiffer" by jacking up the adjuster. You will only increase the force required to initiate wheel movement up from the full-extension.

Most dampers will tolerate adjustment of the pre-load cams without an effect on damping performance. This is because no real change in rebound force has occurred. However, replacement of the standard spring will effect the damper's performance. A shock damper that comes standard with a 100 pound-inch spring (pounds per inch of compression) can be overworked with a 120 pounder. At full compression, the rebound force jumps 80 pounds with a four inch travel shock. The work load on compression damping is reduced but the rebound force put upon hydraulic rebound restriction is beyond the damper's ability to control it. This type of mismatch increases the damper's work load, raises operating temperatures beyond design limits and will cause fatigue of the hydraulic fluids and/or mechanical parts.

Installation of a softer-than-recommended spring results in an altogether different set of problems. A soft spring will allow the shock's damping to over-power the lesser amount of rebound force.

Excessive rebound damping will cause the shock to "pack" or "pump-down." A too-soft spring cannot produce the rebound acceleration rate necessary to fully extend the damper under successive compression impacts. The shock (and wheel) will become trapped in a half-travel position between full compression and half stroke. In effect you will lose the first half of the wheel's (shocks') travel. Excessive bottoming will result in damage to the shock and fatigue of the spring.

Coil spring designs vary for three reasons—production costs, performance desired and available materials. Generally speaking, shock springs are a compromise in design. Making the proper selection is dependent on what spring rate (minimum and maximum) the damper can tolerate. The distributor or manufacturer should be able to give you these data.

Sophistication of long wheel travel damper units has limited the amount of compromise which has been designed-in. The old rule of thumb allowed for a 40 lb.-in. (twenty each side) spring tolerance. If a shock was designed for a 100-pound spring an 80 or 120 lbs.-in. change was acceptable. Today's more exacting damping designs and rates will accept, at best, a 20 pound (ten lb.-in. either side) variance without suffering over-springing or over-damping problems.

Spring design and construction is based on the practical limits at which wire can be wound economically. Ideally, progressive rate springs can deliver optimum performance by giving a soft ride on the bottom (to best soak up small undulations) and rise geometrically in load resistance as wheel travel and impact forces (large obstacles) increase.

Shock springs come in three basic designs—straight-wound, progressive and dual-rate. Straight-wound springs are of a

• *Red Wing shocks are produced by Kayaba, of Japan. They are very similar, if not identical, to the OEM Kayabas that come as standard equipment on numerous Japanese dirt bikes. Kayaba utilizes the de Carbon nitrogen gas pressurizing system, which offers numerous advantages. The sealed construction necessary with this high-pressure shock means the damper cannot be disassembled. This eliminates the possibility of an ill-experienced rider contaminating or incorrectly assembling the damper—a problem that plagues "rebuildable" units. The swedged / spot-welded / seam-rolled fabrication is necessary to prevent gas or oil leakage. The Kayabas are nitrogen pressurized to 15 atmospheres (220 psi) during assembly (with the dampers fully extended).*

This particular de Carbon system uses a floating piston to separate the hydraulic fluid from the gas. The floating steel piston has a 6mm-wide neprene O-ring as a seal. The gas chamber formed by the floating piston is slightly more than an inch high and the inside diameter of the damper body.

The oil reservoir takes up the next four inches of the damper body's length and contains a 3-weight hydraulic fluid. The final inch of the damper body contains fixed-in-place neoprene and steel valving rings. These rings work as a hydraulic topping spring. The Kayabas do not have a conventional coil-spring topping cushion.

Both compression and rebound hydraulic damping restrictions are controlled by the piston valve assembly. There are no separate rebound valving systems in the damper body. One set of orifices in the piston is quite large and allows for an unrestricted flow of oil on the piston's compression stroke. Most of the piston's valving restriction is designed to control oil flow on the extension or rebound stroke by diverting it through smaller orifices. As the shock spring applies rebound pressure on the piston a set of washer-like plates close off the piston orifices which cause a hydraulic resistance or drag to slow the recovery rate. Piston-to-sleeve sealing is acquired with the use of a narrow, split phenolic ring. The damper body functions as the sleeve for both pistons.

The shaft is the latest large type with a 12.5mm (.492") diameter. It is hard chrome plated and glides through a fixed rubber seal, which is compressed between the upper two spot-welded top damper body plates. The external sleeve on the damper body is necessary to facilitate spot-welding the pre-load cam bosses. They cannot be attached directly to the damper body because of the critical internal bore dimensions and finish.

The only non-steel parts visible are the

plastic stone-guard shield inside the spring and the rubber shock-eye grommets. The large spring has a two-rate winding. Our test spring was a 90/160 lbs.-in. coil which fit with less than a ¼-inch preload. Extra-large physical dimensions of the Kayaba and its all-steel construction make it quite heavy and cumbersome to mount. It could not be fitted up-side-down on our Penton and the chain scrubbed against the spring. Tipping the scales at four-pounds, 18-ounces, our Red Wings were about a pound-per-pair heavier than most aftermarket shock assemblies.

After riding at moderate-to-fast speeds for 10 to 15 minutes the Red Wings come up to operating temperature. The Kayabas radiate an enormous amount of heat as compared with low-or no-pressure gas shocks. Initially we considered the high operating temperature indicative of a problem. But the radiation was a healthy sign of rapid heat dissipation.

The high-pressure system provides three specific benefits: it isolates the hydraulic fluid from atmospheric contamination (aeration); raises the oil's boiling temperature; and provides a compressible volume to compensate for the space taken by the shaft as it slides into the damper chamber. A side-effect of the high pressurization is that it works as a secondary spring. Attempting to compress the damper rod requires a substantial amount of effort as 30 to 35 pounds of force are needed to start and complete full compression.

After 150 miles of evaluating we found the limits and benefits of the Red Wings, which were the most versatile of any ever used on our Penton (eight types over 18 months). Ride height was up more than we prefered because eye-to-eye length is ⅜-inch (about a half-inch at the axle) longer than the standard shock. These shocks worked superbly at soaking up small, choppy undulations and delivered an extra-cushiony ride through-out total wheel travel. For all-day riding comfort it excells because it does not react harshly to the majority of bumps.

The Red Wing/Kayabas do not provide fade-free, race-level damping resistance. From cold, they will fade to the point of allowing the bike to pogo or pitch within 20 minutes or five miles of knee-deep whoop-de-dos. For hard, extended-distance racing expert riders require damping characteristics with more fade resistance and consistancy. Also, the available shock (damper) travel is less than most aftermarket units by ¼- to ½-inch, which translates to ⅜- to ¾-inch at the axle. Performance of the spring is as good as on any shock we have tested and much better than most. For trail, enduro and not-so-serious motocrossers the Red Wings are an excellent buy.

Red Wing
High-Pressure Nitrogen Charged

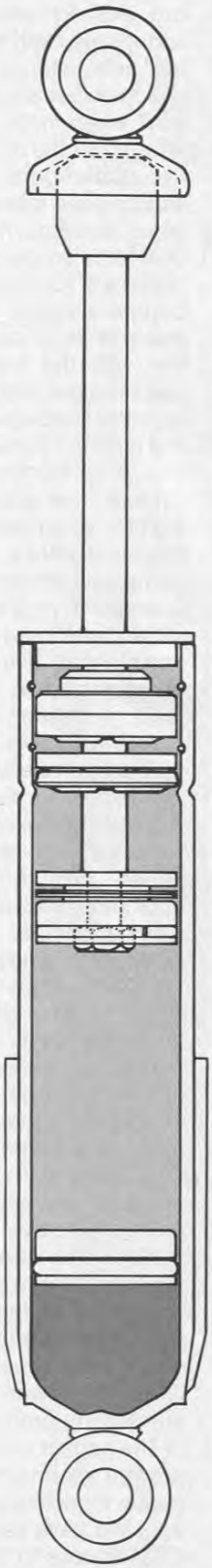

single wire and coil diameter wire. Pitch (helix angle) and spacing between coils is the same for the spring's total length. One rating is given these springs, such as 100 pounds-inch. The rate of tension is constant at 100 pounds per inch of compression. In four inches of travel the force required for total compression is 400 pounds. Straight-wound springs are commonly used with vertically mounted shocks. These are the least costly springs to produce.

Progressive-rate springs give variable tension rates from full extension to complete compression. This is accomplished in production by varying the pitch angle of the coils. At one end of the spring the wire pitch will be shallow and distance between coils close. The pitch and coil spacing will increase progressively up to the other end of the spring. This variable winding results in a progressive rating like 60/90 lbs.-in. This means, effectively, that a 60 pound pressure is required to compress the spring in its first inch of progress and up to 90 lbs.-in. in the last. Progressive springs with low compression ratings work well with light bikes and soft-damping shocks. High-rate progressives are used to compensate for the falling-rate suspension geometries of bikes with lay down shocks. These springs are somewhat more costly to produce.

Alternate, but not common (or economical), methods of acquiring a progressive rate are to change a spring's wire diameter at some point on its length. Alternating wire diameter of a single spring is impractical and unnecessary in production, since variable-pitch coils accomplished the same result at a much reduced price. However, most factory-level tuners have taken springs to a grinder and removed material from a certain number of coils to alter the rate. Grinding material from the wire is done to alter the rate when a spring is very close to the desired rating and a change to the next softer stock spring is too great a transition.

Coil radius variations, where the top of a shock spring is smaller around than the bottom, are common. They do alter the spring rate at the very top or bottom of compression but the amount is insignificant. The object of reducing coil diameter is usually a mechanical convenience to permit a smaller spring retaining cap. This consideration is important with lay-down mounted shocks where the swinging or pivoting of the units requires additional clearances.

Dual-rate springs offer progressive-like action without having to design special coiling dies. By stacking two different springs together, one soft and one stiff, shocks can be made to soak up small bumps comfortably as well as cope with strong compression forces. For the tuner, dual-rate springs give the widest range of in-the-field adjustability. Often a tuner will play with a dual-rate setup in order to find out exactly which true progressive springs are likely to work best for a particular rider, bike or situation.

Sometimes shock and spring designers goof when mating the two parts. At the advent of the long-travel era, conventional dampers would fail when the shocks were forward-mounted. The additional leverage multiplied the compression force on the shock enough to cause repeated hard bottoming. The rubber bumpers would fatigue and allow the piston shaft to make metal-to-metal contact with the foot valve which caused irreparable damage to the damper. Just about all shocks are now designed so that this metal-to-metal contact is not possible even if the bumper were removed.

Measuring available spring travel is important when swapping them from one brand of shock to another. There are instances where a spring cannot be changed from one shock to another even if they are the same brand. Due to the variations in available travel of different damper models, some springs can coil bind, or bottom, before the piston shaft moves full travel. It is best to install the spring and retainer you desire to use on the damper for measuring. Move the cam adjuster to maximum pre-load and measure the total available free-space between coils. After this is totaled the optimum travel of the damper shaft (including bumper height) must be measured. The available spring travel must total more than that of the damper. If shock travel is greater than the spring's the result will be damage or breakage of the spring retainer, pre-load cam or it's retaining bosses.

At this time there seems to be no particular limit to suspension travel and innovation. Some of the 1977 Grand Prix works motocrossers are going to have a full-12 inches of travel—front and rear. Ten inches is the current accepted minimum with the works bikes and production racers are averaging eight to nine. Configurations abound—forward mount, lay-down, long shock, monoshock and the latest far-forward cantilevered systems are nearing production lines.

The perfect shock is not yet in sight. But present aftermarket shocks are vastly superior than those available a few years ago. We have seen very few "bad" non-OEM shocks in the past year. Most accessory shocks are adequate or good and will serve the needs of the vast majority of riders. In reality, only top expert or professional racers require shocks which are any better than those you can buy over the counter. The rest of us have never had it so good. ◉

• *The approach S&W has taken to isolate hydraulic shock fluid and and provide piston shaft compression space is novel, if not new. The Monroe-of-Michigan-made S&Ws are non-pressurized conventional dampers, with a freon-filled plastic gas bag as the compression chamber. The original design of the gas bag system came from the auto industry's need to eliminate the air/oil mixture in horizontally-mounted steering dampers. S&W saw the benefits of this concept and adopted it for motorcycle shock usage.*

Construction of the S&W dampers is all-steel. Other than the alloy pre-load cams and spring retainers, no aluminum is used in the S&Ws. Shaft diameter is 12.4mm (.488") and maximum available travel of our 13⅜-inch shocks is just under 4½-inches. A three-lip neoprene seal is used to prevent leakage around the shaft. The piston ring is an extra-wide, ¼-inch, full-circle nylon molding which minimizes fluid blow-by.

The piston is a two-way valve which controls compression and rebound damping. Orifice washers are fitted on the top and bottom of the piston to allow the desired amount of oil to be passed during compression and rebound strokes. A coil spring is used to pre-load the bottom set of washers. The seamless steel piston sleeve has a one-way foot valve in its base. On the rebound stroke, the piston draws fluid up through this valve. On compression, the foot valve closes to force all the fluid dispersion to take place with the oil confined in the sleeve. This system forces the oil to recirculate from the sleeve bore through the damper body during rebound cycle strokes.

S&W does not use a coil spring or separate hydraulic damping as a topping device. A special ¼-inch thick urethane washer is incorporated as a topping bumper. The hydraulic fluid is a 3- to 5-weight oil, developed by Monroe.

The design and construction of S & W's gas bag concept is more intricate than the bag's appearance would suggest. The bag material is a special high-density nylon—not just plastic. Other materials used initially for the bags proved to leak as well as absorb gases. Freon was found to be the most practical inert gas to use, since it has a large molecular structure and would leak through the bag's walls less readily than other gases.

The nylon freon gas bag is placed in the shock between the piston sleeve and damper body. Dampening fluid entirely fills the damping body except for the space occupied by the freon bag. The shock is then permanently sealed by Monroe. This procedure virtually eliminates any air contamination of fluid and it is accomplished without pressurizing the shock. By not pre-pressurizing the damper assembly there is a minimal

amount of seal drag and no spring-like rebound characteristics which can complicate spring selection.

The S&W shock assemblies are quite light considering their all-steel construction. Each shock weighs an even four pounds. We could not fit the S&Ws in an inverted position on our Penton, because the spring retainers hit the swing arm when the shocks were compressed. They offered no interference problem with the chain. The split, dual-rate spring set-up delivers progressive-like rebound action. The lower rate spring is a straight-wound 90 lbs.-in and the higher is 160 lbs.-in.

Use of the spring pairs gives the rider more versatility with changing rebound rates. S&W will have alternate windings available for both spring rates. This will allow stiffening or softening the initial or secondary rebound rates without dramatic changes in the remaining spring's performance. The shorter, softer springs are used in the first inch and a half of travel to absorb small bumps. The longer, stiffer springs soak up the whoop-dee-doos and sharp dips.

In the lay-down position, the S&Ws deliver a supple ride in the initial four inches of wheel travel. They allowed our Penton to run comfortably over choppy trails and roads without producing a chattery washboard effect. Damping in the lower half of travel seems to be perfectly matched to spring tension. And by moving the preload cam up and down its half-inch of adjustment we could set the ride height to suit rider and terrain variations.

The upper half of the shocks' movement was used extensively in our knee-deep whoop section. The spring/damping rates and performance were nearly ideal for our useage. When riding full-blast through the whoops for a few miles we found the shock performed much better if the pre-load cam was moved to its top adjustment notch. This made the shock rebound quicker between each whoop and alleviated a slight pump-down problem. At the end of the eight miles of whoops the S&Ws were faded somewhat but not enough to cause major handling problems. After cooling to more normal operating temperatures they recovered full damping.

The S&Ws performed better as more miles were put on them. After 125 miles they had normalized and delivered more consistent performance in the transition from cold to hot. They were as pleasureable to use for trail riding as they were for race-like conditions. The damping fade might be too much for the requirements of top professional riders who race big-bore motocross bikes. Most expert motocrossers, desert racers and enduroists will find the S&Ws nearly perfect for their demands because of the supple ride and acceptable damping fade.

S&W
No-Pressure Freon-Celled

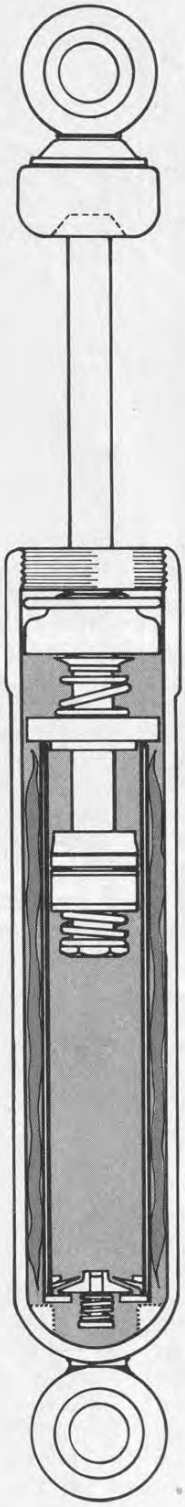

THE SHOCK DYNO

• *The motorcycle shock absorber dynomometer is a specialized instrument used to measure hydraulic damping forces. It is a distant relative of the engine dynomometer, which measures mechanical power. The shock dyno tells us how much resistance a damper has to input energy. The engine dyno tells us how much energy a motor produces working against a resistance. Motorcycle shock dynamometers are not standard industrial hardware like engine dynos. They are one-offs built to individual specifications and requirements.*

We used S&W's mechanical shock absorber dynamometer as a comparative measuring device for our three test damper units. S&W's dynamometer uses a simple crankshaft, connecting rod and cross-head to deliver fast, forceful compression and rebound strokes to the damper units. Since a crankshaft system produces variable speeds at the shock piston our force or energy chart (curve) is elliptic in shape rather than vertical or horizontal.

What is shown as an energy resistance chart is actually a photograph (taken at a very slow shutter speed), of a trace on the oscilloscope attached to S&W's dynamometer. Each elliptical loop represents one complete test cycle. Shock stroke is constant at two inches and cycle speed was varied from 100 to 300 (in 50 cycle increments) cycles per minute. Operating temperature was maintained at 100°F. Changes in cycle (damper piston) speeds cause different resistance curves to be formed on the oscilloscope.

What you see as shock performance curves are graphic representations of what their damping is like at different cycle speeds. The amount of resistance a damper unit delivers at a specific number of strokes per minute cause variations in the curves. Vertically, the performance chart represents shock stroke, (travel) which is two inches. Horizontally the graph indicates resistance in pounds. To the right of the zero (0) resistance line is rebound damping; to the left is compression damping. Each elliptic curve is formed in a clockwise direction. At the top we have compression; at the bottom, extension. Peak piston speed is in the center of the chart.

The shock dyno performance curves tell the layman little more than if there is a valving problem or fluid fatigue in a damper unit. These would be indicated by blips or abnormal dips in the curve(s) where there is a sudden increase or decrease in resistance. Abnormal heat rise would be apparent if the curve(s) shifted inward (showing lower resistance) drastically in a short time.

Performance information with regard to pounds of resistance, force per inch per second, at certain stroke speeds and specific temperatures are decipherable only by the few hydraulics specialists that use shock dynamometers as a test bed tool. The resistance energy figures must be fed into numerous complex formulas related to weights, piston speeds, leverage acquired with various attachment points, anti-squat and pro-squat designs of individual motorcycles and spring rates. Even with all the formulas in hand, the dyno is only a narrow kind of measuring device. It tells you something about what you have but does not allow designers to build the ultimate suspension system.

The best hydraulics and suspension engineers still guess and compromise with shock design—even with the dynamometer performance figures in hand. The one uncontrollable variable is also the final performance dynamometer—the rider. Because of this variable there is no such thing as the "ideal" shock dyno curve.

Marzocchi

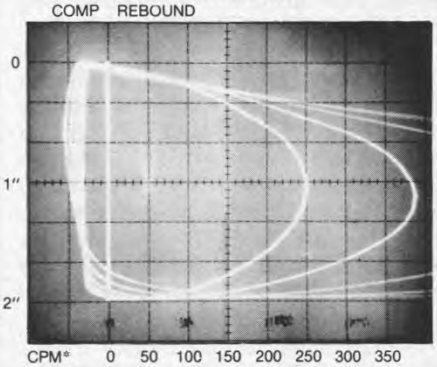

Red Wing

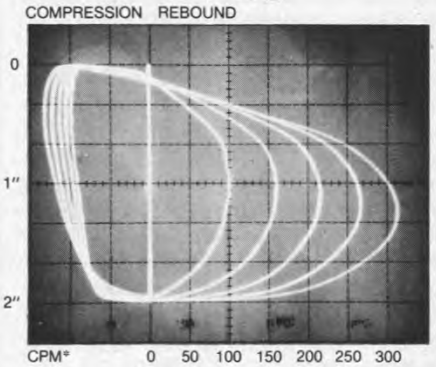

S&W

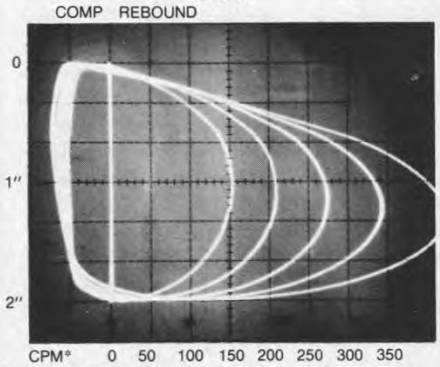

*Cycles Per Minute